# E-T-A PowerPlex® Panel Modul PP-M-PM024

## Description

The ***PowerPlex®*** Panel Module has been designed for DC 12 V and DC 24 V on-board electrical systems of leisure boats and work boats. The module serves for the connection of up to 32 switches, with or without corresponding status indication via signalling LEDs. This allows easy integration of conventional switching panels with the benefits of a smart power distribution, control and monitoring. The patented Four Level Protection Concept (FLPC) offers redundant overload protection. In addition the E-T-A circuit breakers integrated in the Panel Modules allow manual activation of the 8 A outputs.

***PowerPlex®*** is a decentralised power distribution and control system. All ***PowerPlex®*** modules ensure reliable control and monitoring of the electrical installations on board, either alone or in combination with other ***PowerPlex®*** components. Besides the protection against overcurrent they allow readout of data of the connected level sensors and temperature sensors as well as of shunts.

All modules of a system communicate and interact via an SAE-J1939-compliant CAN bus. ***PowerPlex®*** is configured by using the ***PowerPlex®*** Configuration Software and the configuration is transferred to the modules by means of USB/CAN converters.

**US patent number:** US 7,633,022 B2
US D661,648 S

## Typical applications

- watercraft, e. g. recreational, boats and work boats
- special vehicles

## Features and Benefits

- well-proven CAN technology
- redundant protection - Four Level Protection Concept (FLPC)
- programmable overload protection
- simple configuration
- Windows based configuration software
- integral diagnostic and monitoring functions
- wire break detection
- inputs for analogue sensors
- dimming function (8 A outputs)
- 32 digital inputs and 32 signal outputs

## Order number

PP-M-PM024-000-0-0-00

## Approvals

| Authority | Norm | Voltage ratings |
|---|---|---|
| DNV | DNVGL-CG-339, Nov. 2016; class B (temp., humidity, EMC), class A (vibration) | DC 12 V<br>DC 24 V |
| Lloyd's Register | Spec No 1, cat. ENV1, ENV2, ENV3 | DC 12 V<br>DC 24 V |

## Technical data

| | |
|---|---|
| Voltage rating $U_N$ | DC 12 V / DC 24 V |
| Operating voltage $U_B$ | 9…32 V DC |
| Max. total current per module | 20 A |
| Degree of Protection | IP22 in a vertical mounting position with the main power connectors downwards |
| Operating temperature range | -40…+85 °C (-40…+185 °F) |
| Storage temperature range | -40…+85 °C (-40…+185 °F) |
| Humid heat (IEC 60068-2-30, Db) | 55 °C / 95 % RH, 24 hours |
| Vibration sinusoidal (IEC 60068-2-6, Fc) | 2 Hz to 13.2 Hz: ± 1 mm<br>13.2 Hz to 100 Hz: acceleration 0.7 g |
| Shock (IEC 60068-2-27, Ea) | 30 g (11 ms) |
| EMC | CE marking to, EN 61000-6-2, EN 61000-6-3 |
| Mass | approx. 1.600 g |
| **Interfaces:** | |
| CAN according to | SAE J1939 250kBit/s |
| The CAN-terminals at each end of the bus require a termination by a 120 Ω resistor. | |
| Inputs | |
| 32 inputs for switches or momentary switches | |
| digital inputs: | 0… 100 Ω: ON; > 200 Ω: OFF |
| 4 analogue inputs | 0…10 V |
| analogue input: | $R_{in}$: 40 kΩ; resolution: 10 bit |
| Outputs | |
| 2 outputs with 8 A max. continuous current | |
| load output: | Power MOSFET, high side switching |
| max. current rating: | 8 A<br>adjustable from 1 A to 8 A in 1 A steps<br>dimmable in 10 steps with 100 Hz PWM |
| typical voltage drop $U_{ON}$ at rated current (at 25 °C): | 60 mV |
| overload tripping range: | 1.01...1.30 x $I_N$ |
| trip time: | adjustable from 100 msec to 6 s |
| current limitation: | typically 60 A at DC 24 V |
| leakage current in OFF condition: | 4 µA |
| wire breakage monitoring in ON and OFF condition of load: | wire breakage tresholds:<br>OFF condition: $R_{Load}$: typically > 5 kΩ<br>ON condition: $I_{Load}$ typically < 200 mA |
| additional overload protection by means of one E-T-A circuit breaker type 1610-21-10 A per output | |
| Compliant with IEC 60533 Electrical and electronic installations in Ships – Electromagnetic compatibility | |

7

## Technical data

| | | |
|---|---|---|
| 4 | outputs with max. 1 A continuous current | |
| | load output: | Power MOSFET, high side switching |
| | max. current rating: | 1 A |
| | typical voltage drop $U_{ON}$ at rated current (at 25 °C): | 70 mV |
| | overload tripping range: | ≥ 4 A |
| | trip time: | typically 2 ms at 10 A |
| | current limitation: | typically 10 A at DC 24 V |
| | leakage current in OFF condition: | 2 µA |
| | self-resetting | |
| 32 | status outputs with integral LED driver, 150 Ω / 5 V | |

## Status indications

There are two LEDs on the top side of each module indicating module and system status.

| Name | Indication | Meaning |
|---|---|---|
| Power | green | flashing frequency refer to manual |
| Bus | yellow | flashing frequency refer to manual |

## Signal output

Configurable Signal Outputs:
32 status indicators (LEDs) can be configured to show the status of the load outputs

| User | Status LED | |
|---|---|---|
| Status indication | load OFF | LED off |
| | oad ON | LED on |
| | fault, short circuit/ overcurrent | flashing quickly |
| | fault, wire break | flashing slowly |

**Note:**
Refer to installation manual for installation and safety instructions

## Pin selection

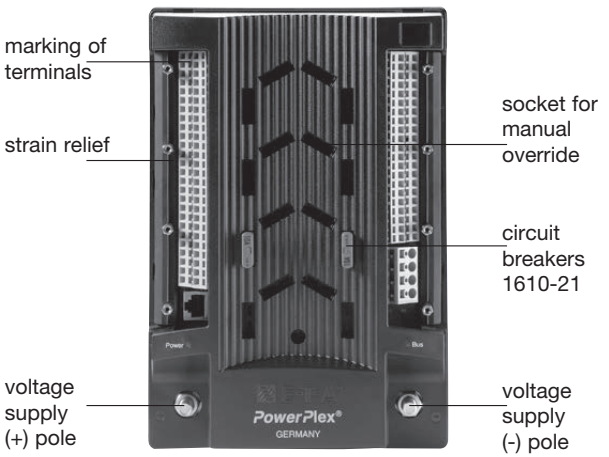


| Left side | Bottom | Top | |
|---|---|---|---|
| 2 returns (SR) | SR | SR | screwless terminals for 1.5 mm² |
| 32 inputs (S1-S32) | S1<br>S2<br>S3<br>S4<br>S5<br>S6<br>S7<br>S8<br>S9<br>S10<br>S11<br>S12<br>S13<br>S14<br>S15<br>S16 | S17<br>S18<br>S19<br>S20<br>S21<br>S22<br>S23<br>S24<br>S25<br>S26<br>S27<br>S28<br>S29<br>S30<br>S31<br>S32 | |
| 4 analogue inputs with a return each | A1<br>AR<br>A2<br>AR | A3<br>AR<br>A4<br>AR | |
| not used | GND | TX<br>RX | |
| parallel CAN bus terminal | CL<br>CH<br>CS | CL<br>CH<br>CS | |

| Right side | Top | Bottom | |
|---|---|---|---|
| 2 returns (LR) | LR | LR | screwless terminals for 1.5 mm² |
| 32 signal outputs (L1-L32) | L17<br>L18<br>L19<br>L20<br>L21<br>L22<br>L23<br>L24<br>L25<br>L26<br>L27<br>L28<br>L29<br>L30<br>L31<br>L32 | L1<br>L2<br>L3<br>L4<br>L5<br>L6<br>L7<br>L8<br>L9<br>L10<br>L11<br>L12<br>L13<br>L14<br>L15<br>L16 | |
| 4 load outputs 1 A, with a return each | 13<br>1R<br>14<br>1R | 11<br>1R<br>12<br>1R | |
| 2 load outputs 8 A, with a return each | | 81<br>8R<br>82<br>8R | for 4 mm² |

## Dimensions – Version 1

### Mounting

mounting bracket 1 (included in delivery)

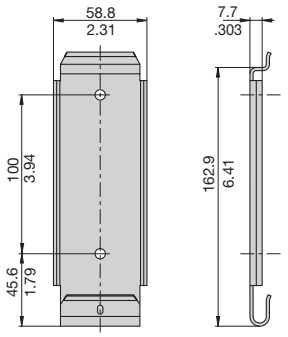


The module is designed for wall mounting by means of the fittings provided

### Installation drawings

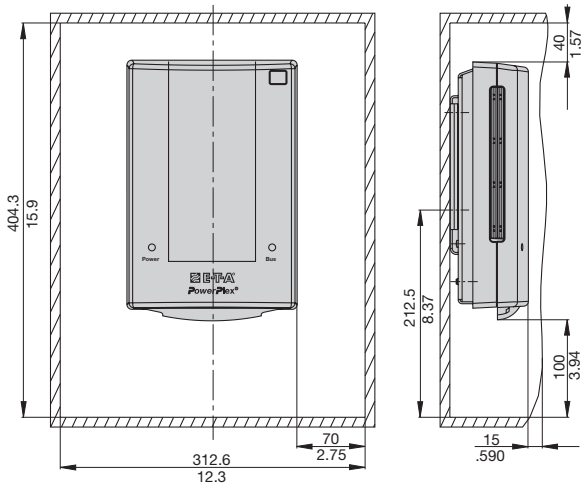


### Dimensions

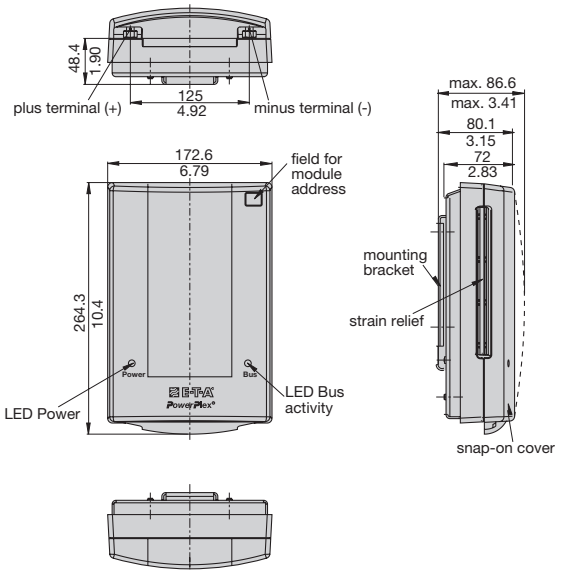


This is a metric design and millimeter dimensions take precedence.
Applicable for normal dimensions without direct tolerance indication:
DIN ISO 286 ± IT 13. Refer to user manual for installation and safety instructions.

## Dimensions – Version 2

### Mounting

mounting bracket 2 (not included in delivery, see accessories)

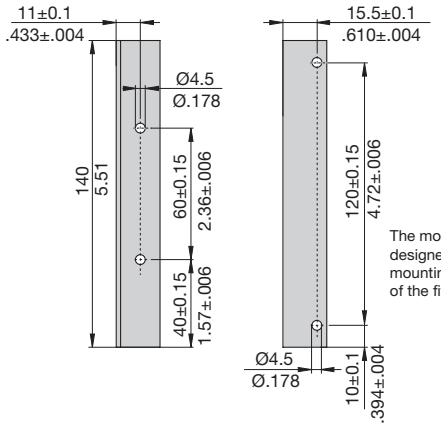


The module is designed for wall mounting by means of the fittings provided

### Installation drawings

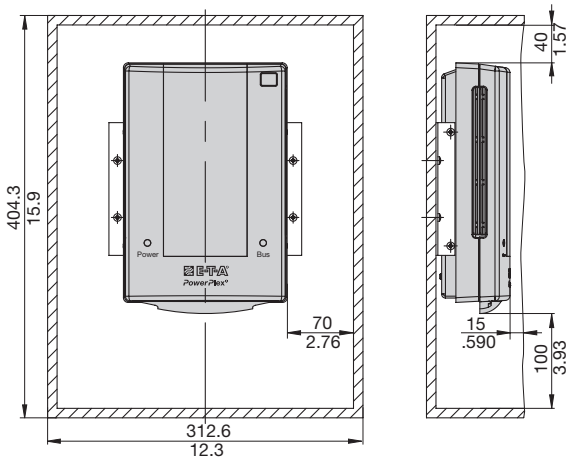


### Dimensions

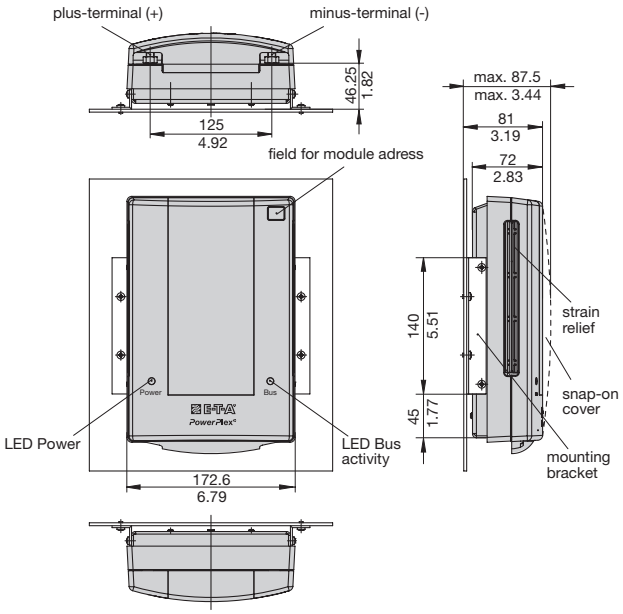


This is a metric design and millimeter dimensions take precedence.
Applicable for normal dimensions without direct tolerance indication:
DIN ISO 286 ± IT 13. Refer to user manual for installation and safety instructions.

## Overview (without snap-on cover)

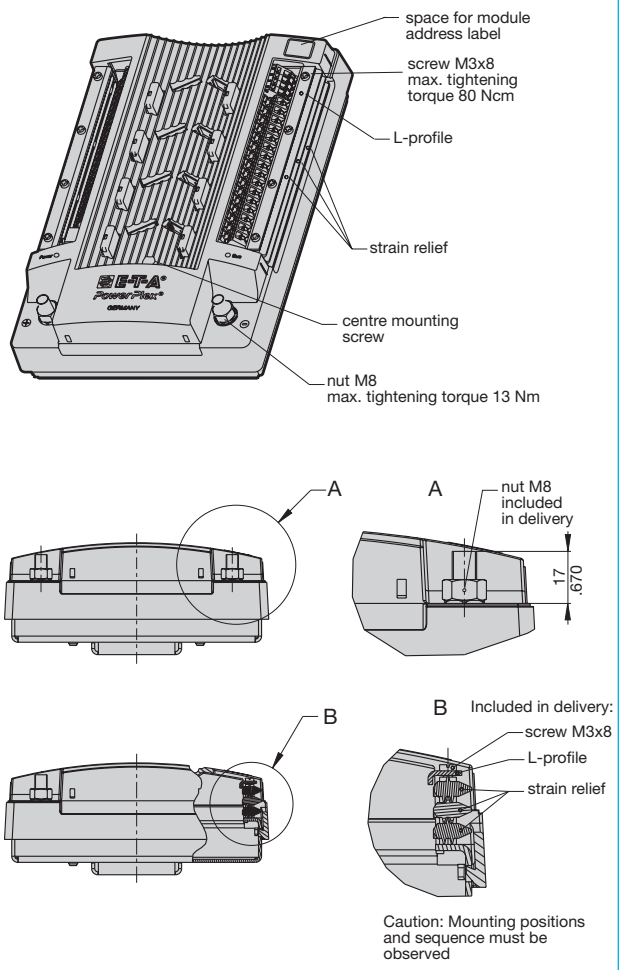


## Accessories

**USB/CAN converter:** XPP-USBC0
XPP-USBC1 (opto-decoupled)

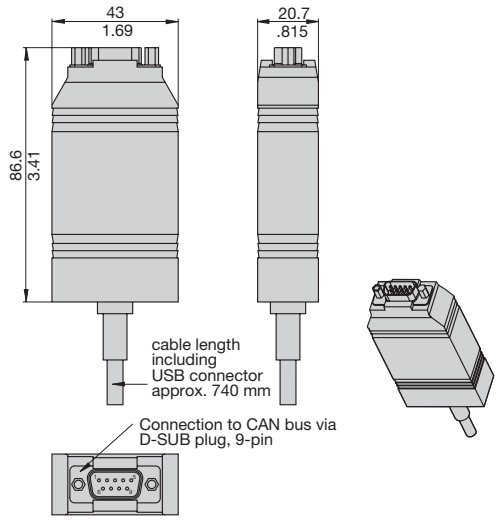


Pin assignment D-SUB output plug

| PIN | assignment |
|---|---|
| 2 | CAN-L |
| 7 | CAN-H |

This is a metric design and millimeter dimensions take precedence.
Applicable for nominal dimensions without direct tolerance indication:
DIN ISO 286 ± IT 13.
Refer to product datasheet for installation and safety instructions.

***PowerPlex®* Configuration Software**

**Mounting bracket 2:**
Y 310 292 01

**Circuit breakers for replacement 1610-21:**
1610-21-10 A

All dimensions without tolerances are for reference only. In the interest of improved design, performance and cost effectiveness the right to make changes in these specifications without notice is reserved. Product markings may not be exactly as the ordering codes. Errors and omissions excepted.